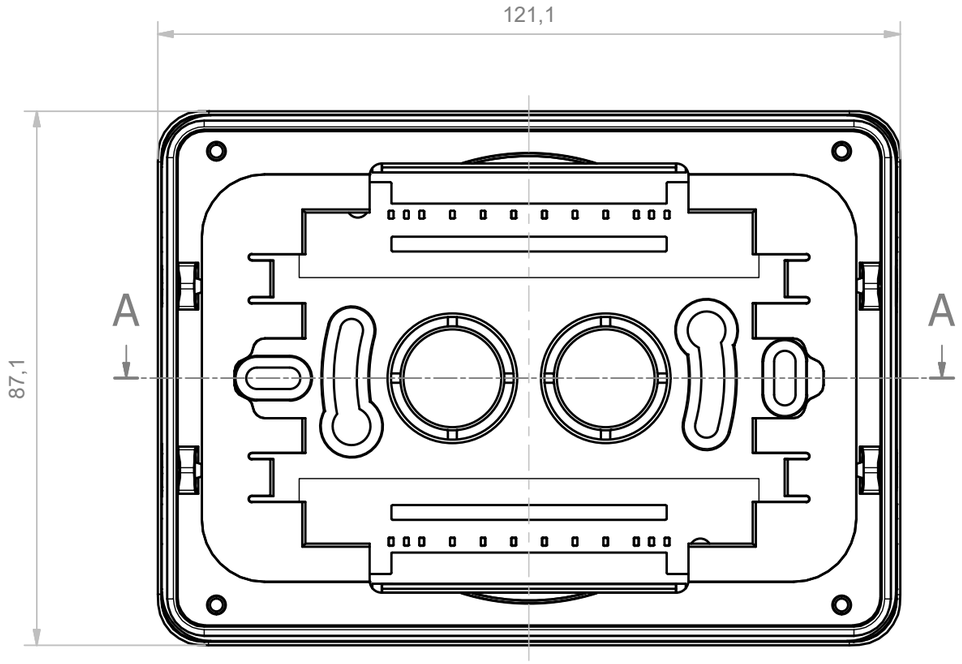

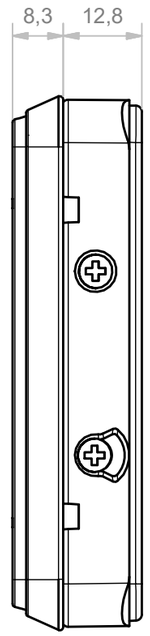

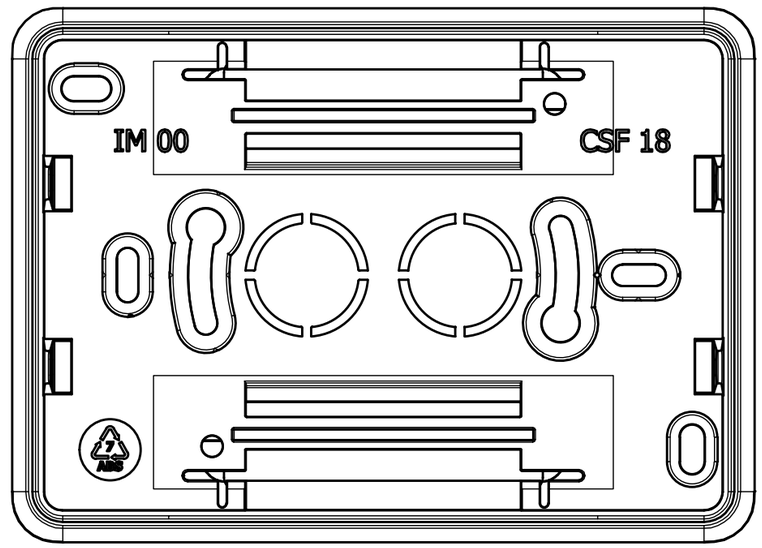

A-A (1 : 1)

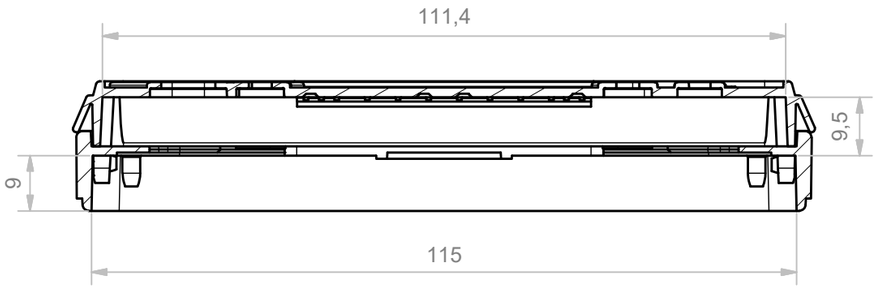

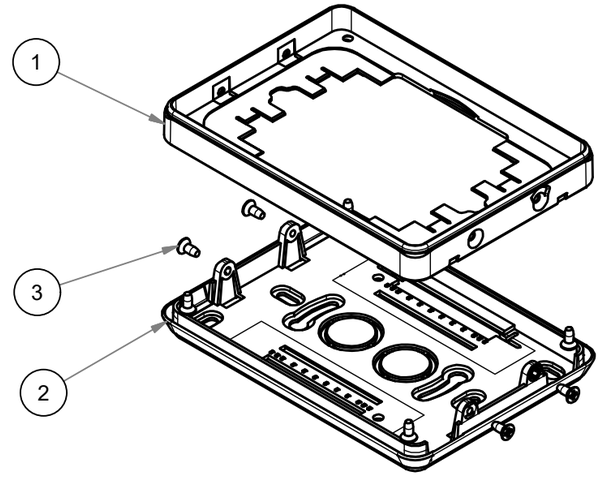

RIF.	Q.TY	DESCRIPTION	CODE
1	1	BASE 80X120 H10 FOR TERMINAL CSF	C-03916
2	1	FRAME REAR ITOUCH VERSION CSF	C-03838
3	8	SCREW D2,9X6,5	PM10012017

RESERVED PROPERTY:The present drawing cannot be reproduced or comunicated to 3d parties, even partially, without the authorization of ITALTRONIC Srl. Italtronic reserves to protect its own rights according to the law.

GENERAL TOLERANCE	UNI EN 22768/1 Media (m)	Drawed: Rigato N.	Checked: Dalla Montà D.	Revision description
SHEET NR. 1 / 1	Dimension in mm	DRAWING BY Manual modification are not allowed	Date: 10/03/2016	Scale: 1 : 1
			Replace nr.	Part number:

5 4 3 2 1

Denomination:
Kit contenitore H10 CSF senza telaietto
Kit enclosure H10 CSF without frame

ITALTRONIC S.R.L.
VIA AUSTRIA 25/D 35127
PADOVA - ITALY
www.italtronic.com

Drawing nr.
C-06560-00